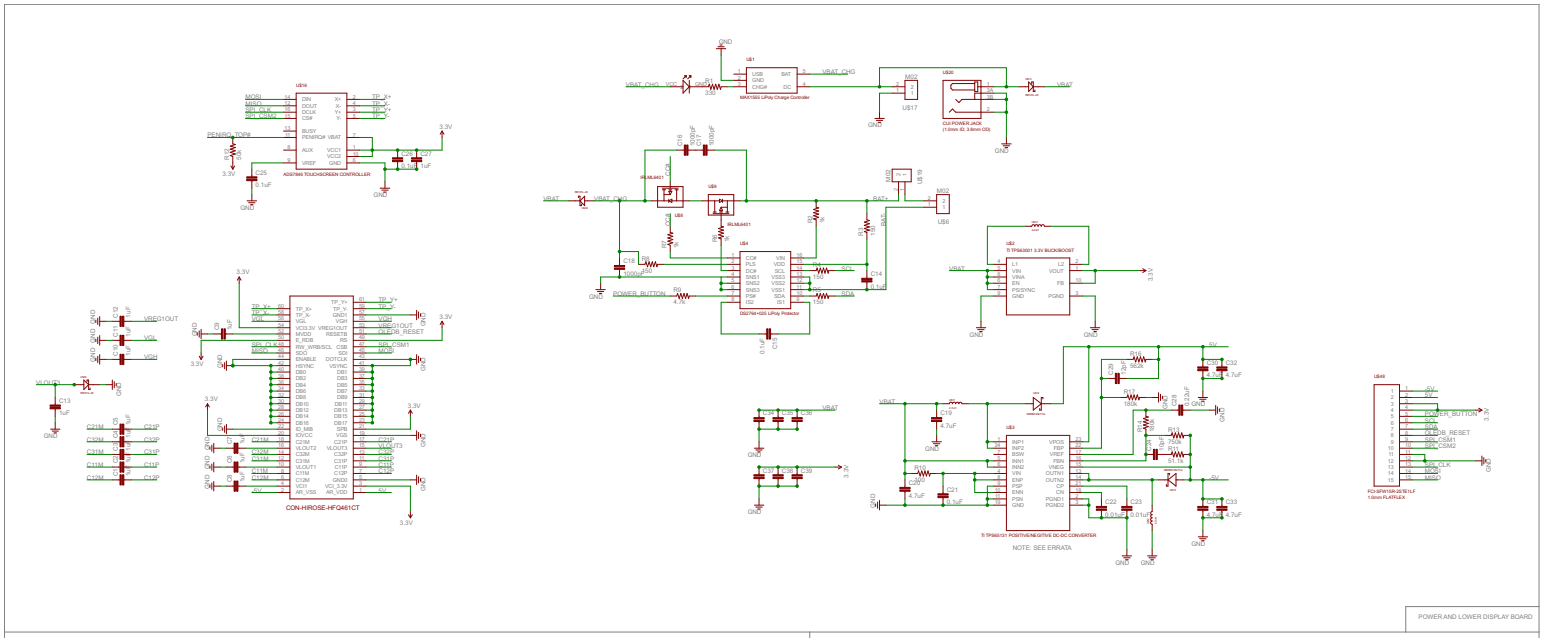

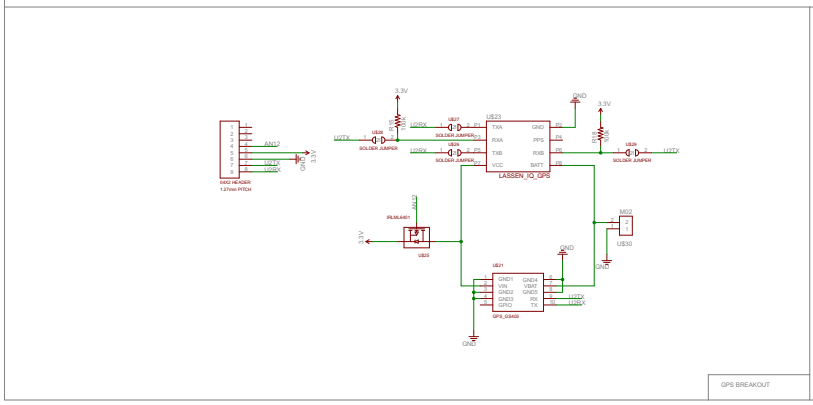

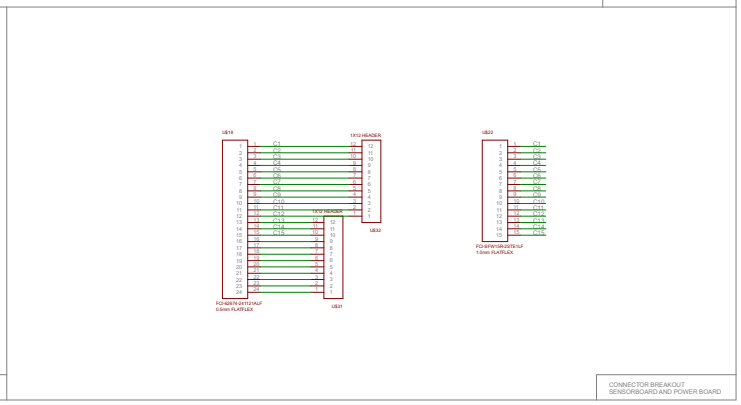

SCIENCE TRICORDER MARK 2
POWER BOARD AND GPS BREAKOUT
DESIGNER: PETER JANSEN
FIRM DATE: SEPTEMBER 2008
WWW.TRICORDERPROJECT.ORG